ED-IPC1100

Datasheet

by EDA Technology Co., Ltd

built: 2026-07-29

ED-IPC1100

Industrial Computer Based on Raspberry Pi CM0

- 1GHz quad-core 64-bit Arm Cortex-A53 processor
- 512MB SDRAM, 8GB or 16GB eMMC storage available
- 1 x HDMI, 2 x USB 2.0, 1 x 100M Ethernet, 1 x RS485
- Supports 2.4GHz Wi-Fi & Bluetooth and 4G CAT1
- 9V~28V wide-range power input with reverse connection protection
- Pre-installed with thermal paste, supports passive cooling via the metal case
- Integrated RTC with a 1F supercapacitor as the RTC backup power supply
- Supports DIN rail mounting

Specifications

System	
CPU	1GHz quad-core 64-bit Arm Cortex-A53 processor
VPU	H.264/MPEG-4 video decoding, 1080p@30fps H.264 encoding, 1080p@30fps
GPU	OpenGL ES 1.1/2.0 graphics processing
Memory	512MB SDRAM
Storage	8GB or 16GB eMMC storage available

Software	
Operating System	Raspberry Pi OS (Desktop) 64-bit Raspberry Pi OS (Lite) 64-bit Raspberry Pi OS (Desktop) 32-bit Raspberry Pi OS (Lite) 32-bit

Front I/O	
Power	1 x DC input, DC Jack connector (5.5x2.5mm), supports 9V~28V input.
HDMI	1 x HDMI port, Type-A connector, compliant with HDMI 1.3a standard, supports 1080p resolution at 30Hz.
100M Ethernet	1 x adaptive 10M/100M ethernet port, RJ45 connector. It can be used to access the network.

Rear I/O	
Nano SIM Card Slot	1 x Nano SIM card slot for installing a Nano SIM card to obtain 4G signal.

Rear I/O	
Micro SD Card Slot	1 x Micro SD card slot, supports installation of a Micro SD card for system boot. Note: The Micro SD card slot is only compatible with the CM0Lite.
Type-C USB Interface	1 x Type-C USB interface, supports eMMC flashing via this interface.

Side I/O	
USB 2.0	2 x USB 2.0 ports, stacked Type-A connector, each supporting a maximum data transfer rate of 480Mbps.
RS485	1 x RS485 interface, 3-pin 3.5mm pitch phoenix terminal, signal definitions: GND/A/B.
Antenna Interface	2 x Antenna interfaces, SMA connector, for Wi-Fi/BT and 4G antenna

Buttons and Indicators	
PWR	1 x red power indicator, used to display the device's power on/off status.
ACT	1 x green system status indicator, used to monitor the device's operating status.
4G	1 x 4G signal indicator, green, for checking the status of the 4G signal.
USER1 and USER2	2 x User indicators, green, allowing users to customize the status based on actual needs.
RS485	1 x RS485 indicator, green, for viewing the communication status of the serial port.
RESET	1 x RESET button, recessed design, pressing the button restarts the device.

Expansion Functions	
RTC	Built-in RTC function with a 1F supercapacitor as the RTC backup power supply.

Electrical Characteristics	
Input Voltage	9V~28V DC
Power Consumption	About 5W

Mechanical Characteristics	
Dimensions	104mm x 86.4mm x 26mm (W x D x H, DIN-rail bracket and antenna are not included)
Weight	About 270g
Installation	DIN rail mounting

Wireless	
Wi-Fi/Bluetooth	Supports 2.4GHz Wi-Fi and Bluetooth, with an external antenna. • 2.4GHz Wi-Fi: Compatible with IEEE 802.11 b/g/n • Bluetooth 5.0: Compatible frequency band 2402MHz ~ 2480MHz
4G	Onboard 4G module with antenna. • EC800M-CN Module (China) ◦ LTE FDD: B1/B3/B5/B8 ◦ LTE TDD: B34/B38/B39/B40/B41 • EC800K-EU Module (Europe) ◦ LTE-FDD: B1/B3/B5/B7/B8/B20/B28 • EC800Q-NA Module (America) ◦ LTE-FDD: B2/B4/B5/B12/B13/B66

Environmental & Regulatory	
Operating Temperature	-20°C ~ 60°C
Storage Temperature	-20°C ~ 60°C
Ambient humidity	5% ~ 95% (non-condensing)
Certifications	• FCC ◦ FCC Part 15 Subpart B • CE ◦ EN IEC 62368-1:2024 + A11:2024 ◦ EN IEC 62311:2020 ◦ ETSI EN 301 489-1 V2.2.3 (2019-11) ETSI EN 301 489-17 V3.3.1 (2024-09) ETSI EN 301 489-52 V1.3.1 (2024-11) EN 55032:2015 + A1:2020 + A11:2020 EN 55035:2017 + A11:2020 EN IEC 61000-3-2:2019 + A1:2021 + A2:2024 EN 61000-3-3:2013 + A1:2019 + A2:2021 ◦ ETSI EN 300 328 V2.2.2 (2019-07) ETSI EN 301 908-1 V15.2.1 (2023-01) ETSI EN 301 908-13 V13.3.1 (2024-10)

System Diagram

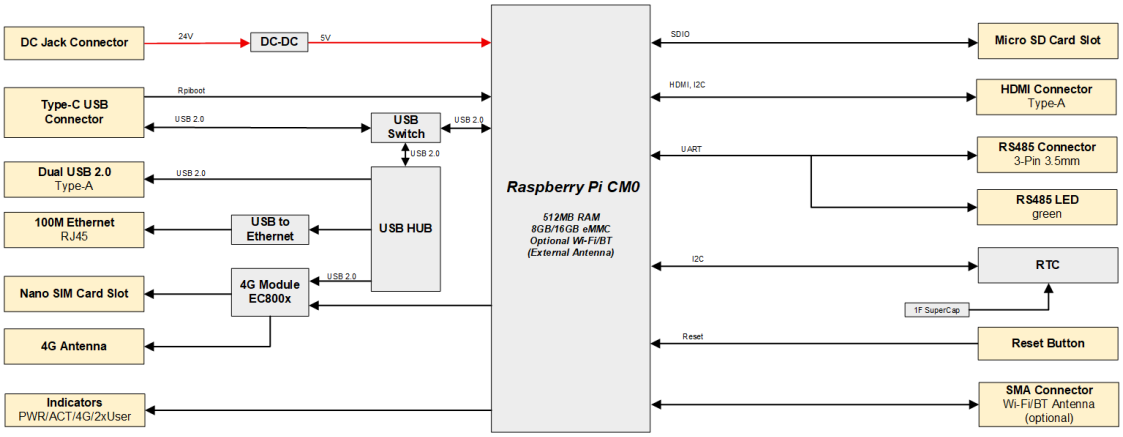

Dimensions

Unit: mm

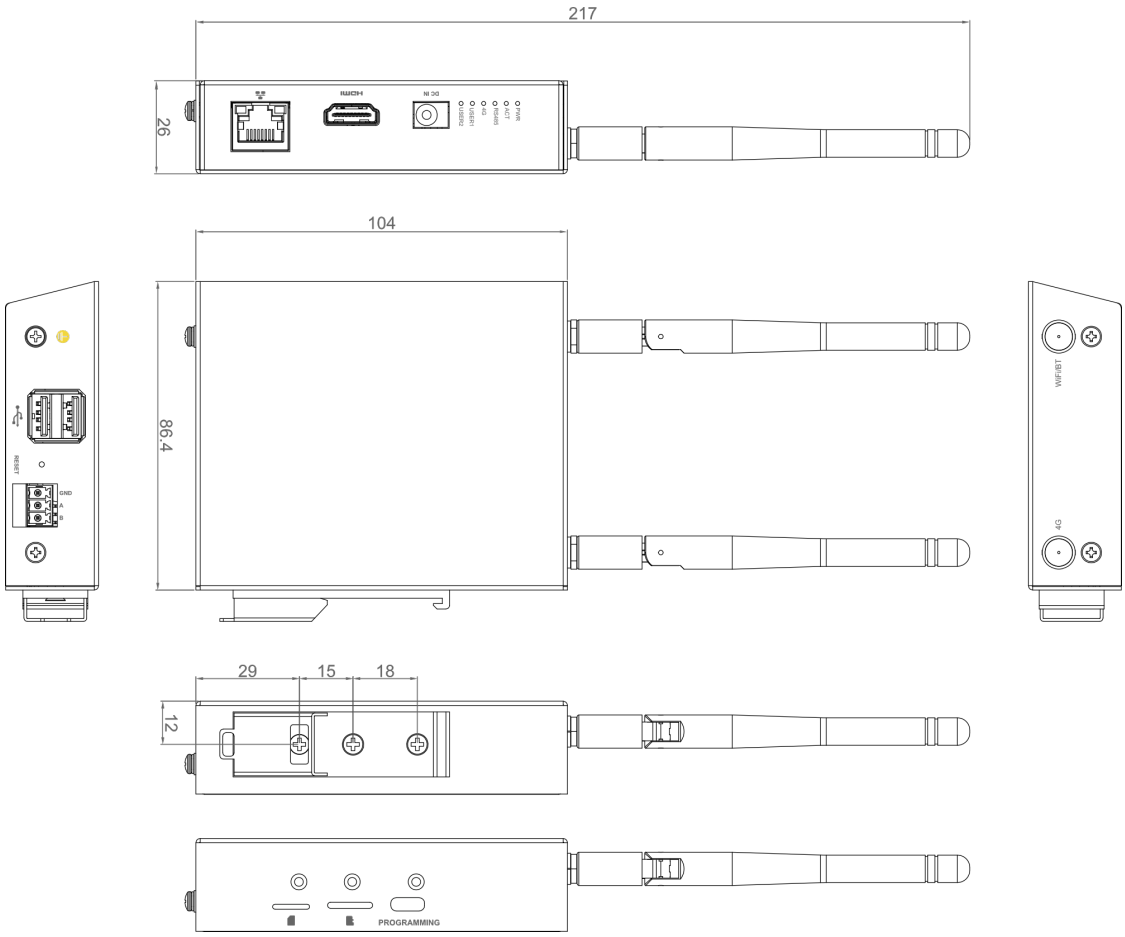

Ordering Information

Coding Rules

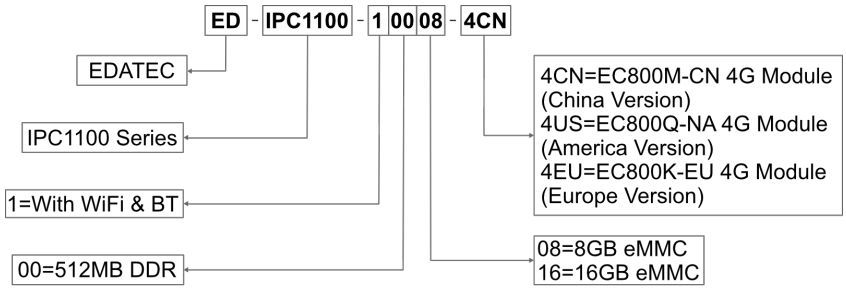

Example

P/N: **ED-IPC1100-10008-4CN**
Configuration: Industrial Computer Based on Raspberry Pi CM0, with 512MB DDR, Wi-Fi & Bluetooth, 8GB eMMC and 4G Module (China Version).

Ordering Code

Model	Description	Stocking Level
ED-IPC1100-10008-4CN	Wi-Fi/BT, 8GB eMMC, Chinese version 4G module	Standard Stock
ED-IPC1100-10008-4EU	Wi-Fi/BT, 8GB eMMC, EU version 4G module	Standard Stock
ED-IPC1100-10008-4US	Wi-Fi/BT, 8GB eMMC, US version 4G module	Standard Stock

> TIP
>
> If you require products with other configurations, please contact our sales team separately.

Optional Accessory

You can choose a power adapter according to actual needs.

Model	Description	Picture
ED-PSU1202-UK	100~240VAC to 12VDC/2A Adapter, with UK AC plug, 5.5mm DC plug	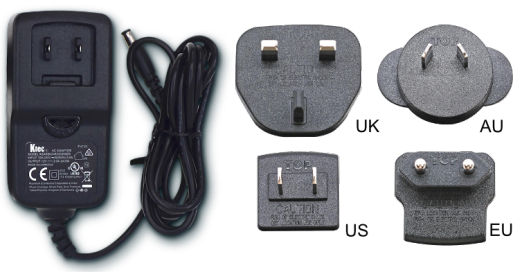
ED-PSU1202-US	100~240VAC to 12VDC/2A Adapter, with US AC plug, 5.5mm DC plug	
ED-PSU1202-AU	100~240VAC to 12VDC/2A Adapter, with AU AC plug, 5.5mm DC plug	
ED-PSU1202-EU	100~240VAC to 12VDC/2A Adapter, with EU AC plug, 5.5mm DC plug	

Model	Description	Picture
NOTE: Each model contains only one of the UK, US, AU and EU plugs.		

Packing List

- 1 x ED-IPC1100 Unit
- 1 x 2.4GHz Wi-Fi/BT Antenna
- 1 x 4G Antenna
- 1 x 3-Pin Phoenix terminal