ED-HMI3120-101C

Datasheet

by EDA Technology Co., Ltd

built: 2026-05-29

ED-HMI3120-101C

10.1-inch Industrial HMI Based on Raspberry Pi CM5

- 10.1" TFT, resolution 1280x800, multi-point capacitive touch screen
- Broadcom BCM2712, quad core Cortex-A76 (ARM v8) 64-bit SoC @ 2.4GHz
- Up to 16GB LPDDR4 RAM and 64GB eMMC storage
- Support Micro SD card and M.2 NVMe SSD storage expansion
- Dual Lans, 1 x Gigabit Ethernet and 1 x 100M Ethernet
- 4 x isolated RS232/485 with electrostatic and surge protection
- 2.4GHz & 5GHz dual-band Wi-Fi, Bluetooth and 4G LTE
- Wide voltage power input range of DC 9V~36V with TVS transient voltage protection and reverse polarity protection
- Integrated supercapacitor (backup power supply, optional), RTC, EEPROM and crypto authentication
- Embedded installation, compatible with VESA 75x75 standard bracket installation

Specifications

System	
CPU	Broadcom BCM2712, quad core Cortex-A76 (ARM v8) 64-bit SoC @ 2.4GHz
VPU	H.265 (HEVC), up to 4Kp60 decode
GPU	OpenGL ES 3.1 & Vulkan 1.2
Memory	Options for 2GB, 4GB, 8GB, 16GB LPDDR4-4267 SDRAM
Storage	Options for 16GB, 32GB, 64GB eMMC storage 1 x Micro SD card slot (user storage expansion) 1 x M.2 B-Key interface (for 2230/2242 SSD storage expansion, optional 128GB/256GB/512GB supported)

Software	
Operating System	Raspberry Pi OS (Desktop) 64-bit Raspberry Pi OS (Lite) 64-bit

Front I/O	
Camera	Built-in 8-megapixel front camera (optional)

Side I/O	
Power	

Side I/O	
	1 x DC IN, 2-Pin 3.5mm pitch phoenix terminals with screw holes. It supports 9V~36V input, the signal is defined as VIN+/GND.
Audio	1 x Audio In/Stereo Out, 3.5mm audio jack connector. It can be used as MIC IN and LNE OUT. • When a headphone is connected, the audio output switches to the headphone. • When no headphone is connected, the audio output switches to the speaker.
RS485	2 x RS485, 6-Pin 3.5mm pitch phoenix terminals with IO isolator, which are equipped with electrostatic and surge protection. The single signal of RS485 is defined as IGND/A/B.
RS232	2 x RS232, 6-Pin 3.5mm pitch phoenix terminals with IO isolator, which are equipped with electrostatic and surge protection. The single signal of RS232 is defined as IGND/TX/RX.
1000M Ethernet	1 x adaptive 10/100/1000M ethernet port, RJ45 connector. It can be used to access the network.
100M Ethernet	1 x adaptive 10/100M ethernet port, RJ45 connector. It can be used to access the network.
SD Card Slot	1 x Micro SD card slot, using to install Micro SD card for storing user data.
SIM Card Slot	1 x Nano SIM card slot, using to install Nano SIM card for getting 4G signal.
Micro USB	1 x Micro USB port, supporting to flash to eMMC for the system.
HDMI	1 x HDMI port, Type-A connector. It is compatible with HDMI 2.0 standard and supports 4K 60Hz.
USB 2.0	2 x USB 2.0 ports, Type-A connector, supporting up to 480Mbps.
Antenna	2 x SMA ports (optional), using to connect 4G antenna and Wi-Fi/BT antenna.
Speaker	1 x PA output, built-in a 4Ω 3W speaker.

Buttons and Indicators	
RESET	1 x RESET button, which can reset the device.
PWR	1 x red power indicator, using to check the status of device power-on and power-off.
4G	1 x green 4G indicator, using to check the status of 4G signal.
ACT	1 x green system indicator, using to check the working status of device.
USER	1 x green user indicator, user can customize a status according to actual application.
COM1~COM4	4 x green UART indicators, using to check the communication status of UART port.

LCD	
LCD Size	10.1" TFT
Resolution	1280 x 800
Color Number	16.7M
Active Area	216.576mm (H) x 135.36mm (V)

LCD	
Backlight	LED
MTBF	>30000h
Luminance	400cd/m^2
Contrast Ratio	1000:1
Response Time	30ms
Viewing Angle (CR≥10)	80° (L) / 80° (R) / 80° (U) / 80° (D)

Touch Screen	
Type	Multi-point Capacitive Touch Screen
Transmittance	≥85%
Connection Method	COF
Controller Interface	I2C
Driver Support	Linux
Multi-touch	5 points
Surface Hardness	6H

Expansion Functions	
EEPROM	Supports 4K byte storage and improves the ease of use of device.
Crypto Authentication	It can be matched to realize the required upper layer application and improves the security of device.
RTC	RTC with 1F SuperCAP backup, which can ensure that the system clock is not affected by device power-off. We also provide a battery base, and you can buy a CR1220 battery backup for RTC.
Buzzer	A tip or an abnormity can be configurated according to actual application, which realizes the alarm function.

Electrical Characteristics	
Input Voltage	9V ~ 36V DC
Power Consumption	24W (Max)

Mechanical Characteristics	
Dimensions	258mm x 172mm x 42mm (WxDxH, antenna are not included.)

Mechanical Characteristics	
Weight	1.2Kg
Installation	Embedded front installation and VESA 75×75 standard mounting

Wireless	
Wi-Fi/Bluetooth (optional)	2.4GHz & 5GHz dual-band Wi-Fi and Bluetooth with antenna. • 2.4GHz Wi-Fi: Compatible with IEEE 802.11 b/g/n • 5GHz Wi-Fi: Compatible with IEEE 802.11 a/n/ac • The Bluetooth supports 2402MHz ~ 2480MHz frequency
4G (optional)	Connect with various 4G LTE modules through the Mini PCIe interface, with antenna. • EC20-CE Module (China/India) ◦ LTE FDD: B1/B3 ◦ LTE TDD: B38/B39/B40/B41 ◦ TDSCDMA: B34/B39 ◦ WCDMA: B1 ◦ CDMA 1x/EVDO: BC0 ◦ GSM: 900/1800MHz ◦ GPS/GLONASS/BDS/Galileo/QZSS (optional) • EC25-AFX Module (North America) ◦ LTE FDD: B2/B4/B5/B12/B13/B14/B66/B71 ◦ LTE TDD ◦ WCDMA: B2/B4/B5 ◦ GSM/EDGE ◦ GPS/GLONASS/BDS/Galileo/QZSS • EC25-AUX Module (Latin America/Australia/New Zealand) ◦ LTE FDD: B1/B2/B3/B4/B5/B7/B8/B28 ◦ LTE TDD: B40 ◦ WCDMA: B1/B2/B4/B5/B8 ◦ GSM/EDGE: B2/B3/B5/B8 ◦ GPS/GLONASS/BDS/Galileo/QZSS • EC25-EUX Module (Europe/Middle East/Africa/Thailand) ◦ LTE FDD: B1/B3/B7/B8/B20/B28A ◦ LTE TDD: B38/B40/B41 ◦ WCDMA: B1/B8 ◦ GSM/EDGE: B3/B8 ◦ GPS/GLONASS/BDS/Galileo/QZSS • EC25-EFA Module (Europe/Middle East/Africa/South-East Asia) ◦ LTE FDD: B1/B3/B7/B8/B20/B28 ◦ LTE TDD: B38/B40/B41 ◦ WCDMA: B1/B5/B8 ◦ GSM/EDGE: B3/B8 ◦ GPS/GLONASS/BDS/Galileo/QZSS

Environmental & Regulatory	
	-20°C ~ 50°C

Environmental & Regulatory	
Operating Temperature	
Storage Temperature	-25°C ~ 60°C
Ambient humidity	5% ~ 95% (non-condensing)
Certifications	• FCC ◦ FCC 47 CFR Part 15 Subpart B • CE ◦ EN IEC 62368-1:2024 + A11:2024 ◦ EN IEC 62311:2020 ◦ ETSI EN 301 489-1 V2.2.3 (2019-11)/ETSI EN 301 489-3 V2.3.2 (2023-01) ETSI EN 301 489-17 V3.3.1 (2024-09)/ETSI EN 301 489-52 V1.3.1 (2024-11) EN 55032:2015 + A1:2020 + A11:2020/EN 55035:2017 + A11:2020 EN IEC 61000-3-2:2019 + A1:2021 + A2:2024/EN 61000-3-3:2013 + A1:2019 + A2:2021 ◦ ETSI EN 300 328 V2.2.2 (2019-07)/ETSI EN 301 893 V2.2.1 (2024-11) ETSI EN 300 440 V2.2.1 (2018-07)/ETSI EN 301 908-1 V15.2.1 (2023-01) ETSI EN 301 908-13 V13.3.1 (2024-10)

System Diagram

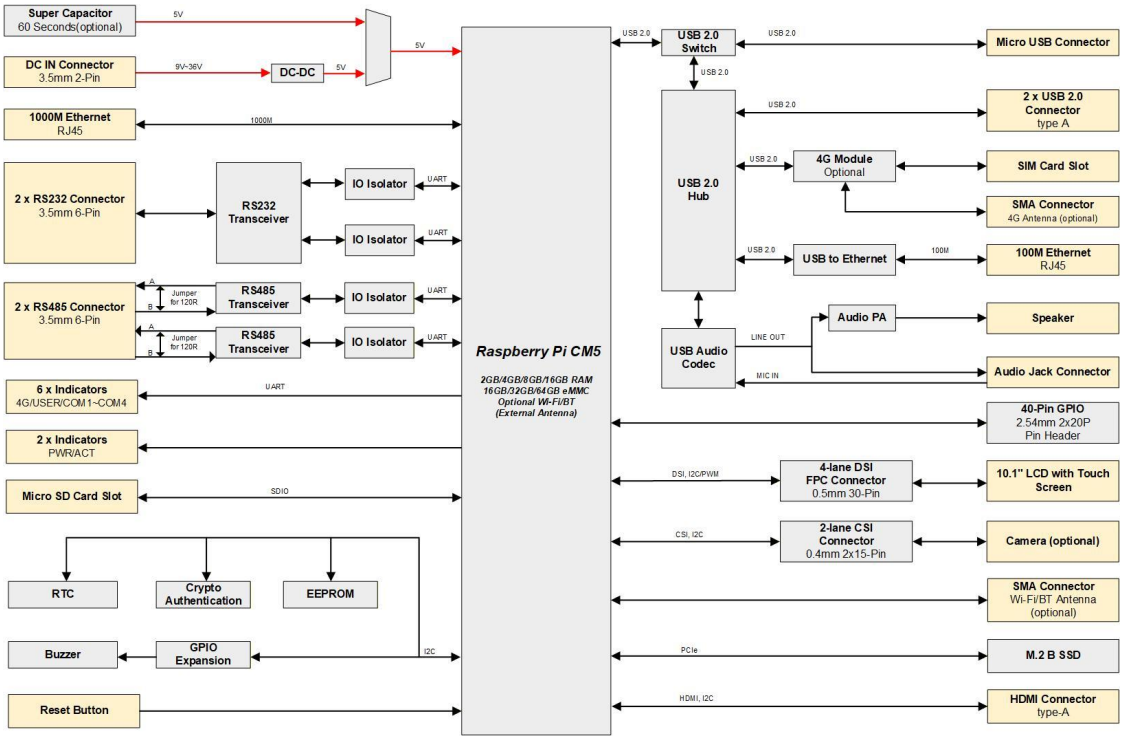

Dimensions

Unit: mm

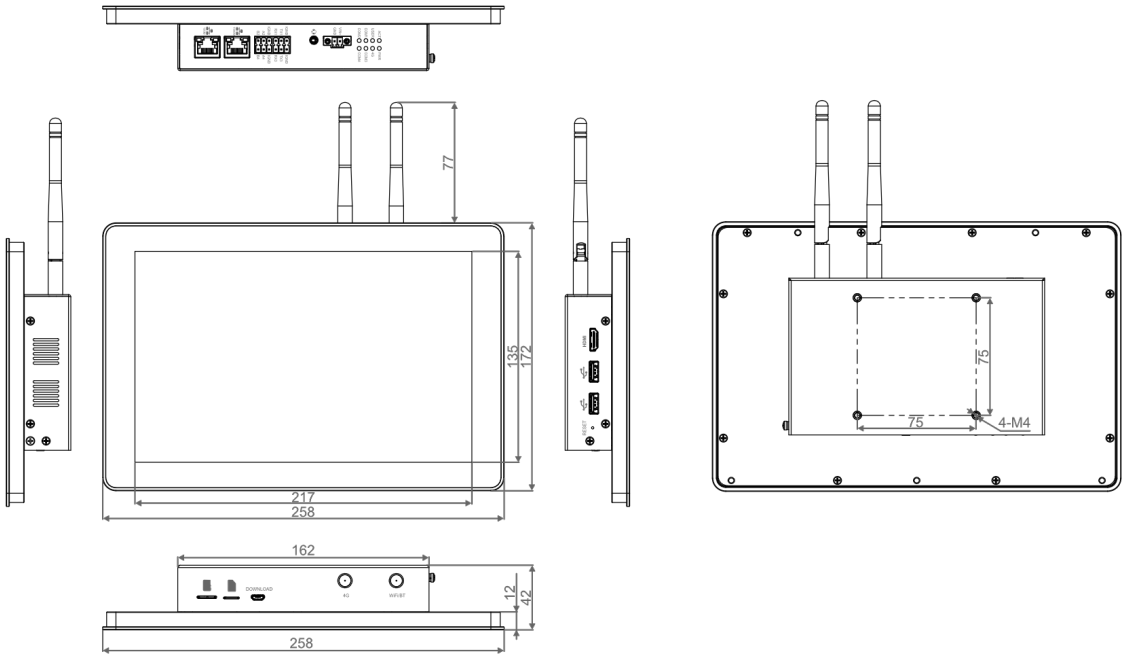

Ordering Code

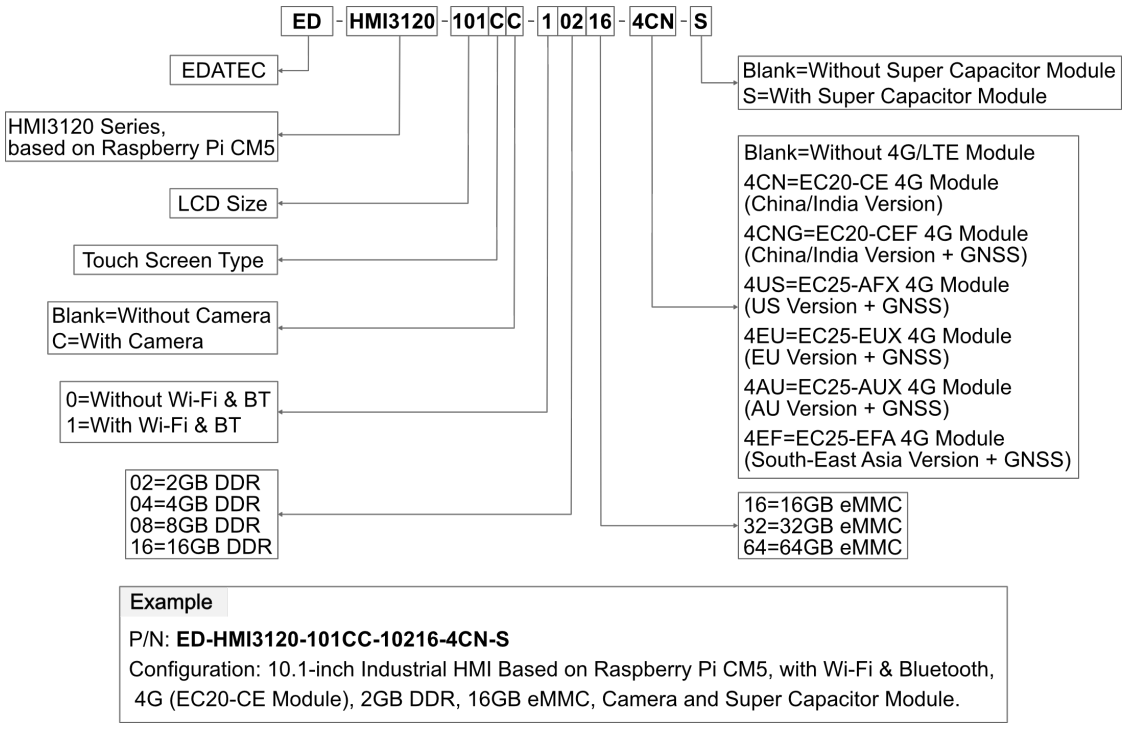

Example

P/N: **ED-HMI3120-101CC-10216-4CN-S**

Configuration: 10.1-inch Industrial HMI Based on Raspberry Pi CM5, with Wi-Fi & Bluetooth, 4G (EC20-CE Module), 2GB DDR, 16GB eMMC, Camera and Super Capacitor Module.

Optional Accessory

You can choose a power adapter according to actual needs.

Model	Description	Picture
ED-PSU1202-UK-3.5PL	100~240VAC to 12VDC/2A Adapter, with UK AC plug, 3.5mm pitch phoenix plug with lock	

Model	Description	Picture
ED-PSU1202-US-3.5PL	100~240VAC to 12VDC/2A Adapter, with US AC plug, 3.5mm pitch phoenix plug with lock	
ED-PSU1202-AU-3.5PL	100~240VAC to 12VDC/2A Adapter, with AU AC plug, 3.5mm pitch phoenix plug with lock	
ED-PSU1202-EU-3.5PL	100~240VAC to 12VDC/2A Adapter, with EU AC plug, 3.5mm pitch phoenix plug with lock	
NOTE: Each model contains only one of the UK, US, AU and EU plugs.		

VESA mounting brackets are available as optional accessories depending on your specific requirements.

Model	Description	Picture
ED-VESA-A	VESA wall mount bracket for ED-MONITOR and ED-HMI series	
ED-VESA-B	Swivel VESA wall mount bracket for ED-MONITOR and ED-HMI series	
ED-VESA-C	VESA desk mount stand for ED-MONITOR and ED-HMI series	

Package Contents

- 1 x ED-HMI3120-101C Unit
- 1 x Mounting Kit (including 4 x buckles, 4xM4*10 screws and 4xM4*16 screws)
- [Wi-Fi/BT Version - optional] 1 x 2.4GHz/5GHz Wi-Fi/BT Antenna
- [4G Version - optional] 1 x 4G/LTE Antenna
- 1 x 2-Pin Phoenix Terminal with lock
- 2 x 6-Pin Phoenix Terminals