# ED-HMI3010-070C

## Datasheet

by EDA Technology Co., Ltd

built: 2026-08-18

# ED-HMI3010-070C

7.0-inch Industrial HMI Based on Raspberry Pi 5

- 7.0" TFT, resolution 1024x600, multi-point capacitive touch screen
- Broadcom BCM2712 2.4GHz quad-core 64-bit Arm Cortex-A76 CPU
- Up to 16GB LPDDR4X RAM, 32GB or 64GB SD Card storage
- 1 x Gigabit ethernet port, 2 x USB 3.0, 2 x USB 2.0
- Dual 4Kp60 HDMI display output
- 5V DC power input via USB-C
- 8-megapixel front camera is optional
- Aluminum CNC + sheet metal case, fanless design, providing excellent cooling performance

## Specifications

| System | |
|---|---|
| CPU | Broadcom BCM2712 2.4GHz quad-core 64-bit Arm Cortex-A76 |
| VPU | 4Kp60 HEVC decoder |
| GPU | OpenGL ES 3.1 & Vulkan 1.0 |
| Memory | 4GB, 8GB and 16GB LPDDR4X-4267 SDRAM are optional |
| Storage | 32GB and 64GB SD Storage Card are optional |

| Software | |
|---|---|
| Operating System | Raspberry Pi OS (Desktop) 64-bit<br>Raspberry Pi OS (Lite) 64-bit |

| Front I/O | |
|---|---|
| Camera | Built-in 8-megapixel front camera (optional) |

| Side I/O | |
|---|---|
| USB 2.0 | 2 x USB 2.0 ports, dual layer type A connector, each channel supports up to 480Mbps. |
| USB 3.0 | 2 x USB 3.0 ports, dual layer type A connector, each channel supports up to 5Gbps. |
| 1000M Ethernet | 1 x adaptive 10/100/1000M ethernet port, RJ45 connector. It can be used to access the network. |
| SD Card Slot | 1 x Micro SD card slot, which is used to install SD card. It supports booting the OS from SD card. |
| HDMI | 2 x HDMI ports, Micro HDMI connector, supporting 4K 60Hz |
| Power | 1 x power in port, USB Type-C connector, supporting 5V/5A DC power input. |

| Internal I/O | |
|---|---|
| PCIe | 1 x PCIe 2.0 port, reserving to connect peripherals. |
| PoE | 1 x PoE port, reserving to connect PoE module. |

| LCD | |
|---|---|
| LCD Size | 7.0" TFT |
| Resolution | 1024 x 600 |
| Colors | 16.7MB |
| Active Area | 154.21mm (H) x 85.92mm (V) |
| Backlight | LED |
| MTBF | >30000h |
| Pixel Pitch | 400cd/$m^2$ |
| Contrast Ratio | 800:1 |
| Response Time | 30ms |
| Viewing Angle (CR≥10) | 85° (L) / 85° (R) / 85° (U) / 85° (D) |

| Touch Screen | |
|---|---|
| Type | Multi-point Capacitive Touch Screen |
| Transmittance | ≥85% |
| Connection Method | COF |
| Controller Interface | I2C |
| Driver Support | Linux |
| Multi-touch | 5 points |
| Surface Hardness | 6H |

| Electrical Characteristics | |
|---|---|
| Input Voltage | 5V DC |
| Power Consumption | 25W (Max) |

| Mechanical Characteristics | |
|---|---|
| Dimensions | 188mm x 123mm x 39mm (WxDxH) |

| Mechanical Characteristics | |
|---|---|
| Weight | About 800g |
| Installation | Embedded front installation |

| Wireless | |
|---|---|
| Wi-Fi | Dual-band 802.11ac Wi-Fi |
| Bluetooth | Bluetooth 5.0 / Bluetooth Low Energy (BLE) |

| Environmental & Regulatory | |
|---|---|
| Operating Temperature | -20°C ~ 60°C |
| Storage Temperature | -25°C ~ 60°C |
| Ambient humidity | 5% ~ 95% (non-condensing) |
| Certifications | • FCC<br>◦ FCC 47 CFR Part 15 Subpart B<br>• CE<br>◦ EN IEC 62368-1:2020+A11:2020<br>◦ EN IEC 62311:2020<br>◦ ETSI EN 301 489-1 V2.2.3 (2019-11)/ETSI EN 301 489-3 V2.3.2 (2023-01)<br>Draft ETSI EN 301 489-17 V3.2.6 (2023-06)/EN 55032:2015 + A1:2020 + A11:2020<br>EN 55035:2017 + A11:2020/EN IEC 61000-3-2:2019 + A1:2021<br>EN 61000-3-3:2013 + A1:2019 + A2:2021<br>◦ ETSI EN 300 328 V2.2.2 (2019-07)/ETSI EN 301 893 V2.1.1 (2017-05)<br>ETSI EN 300 440 V2.2.1 (2018-07) |

# System Diagram

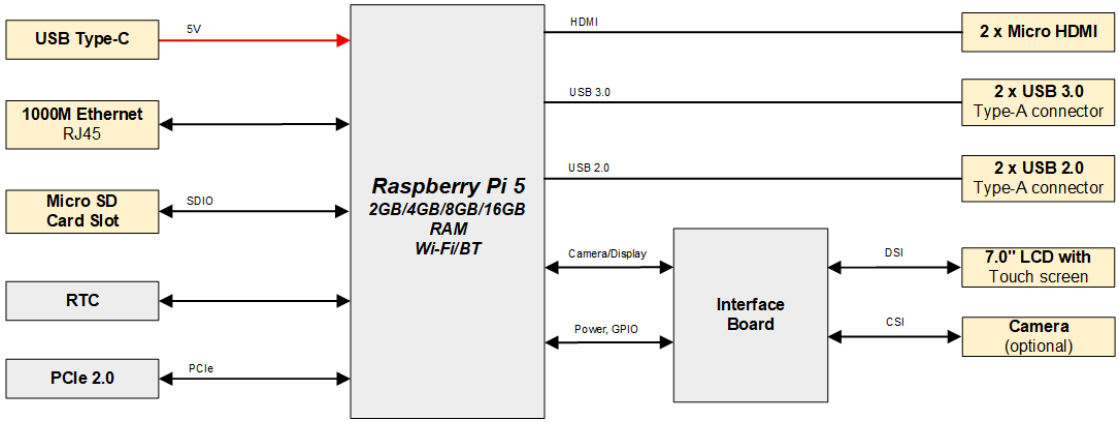


# Dimensions

Unit: mm

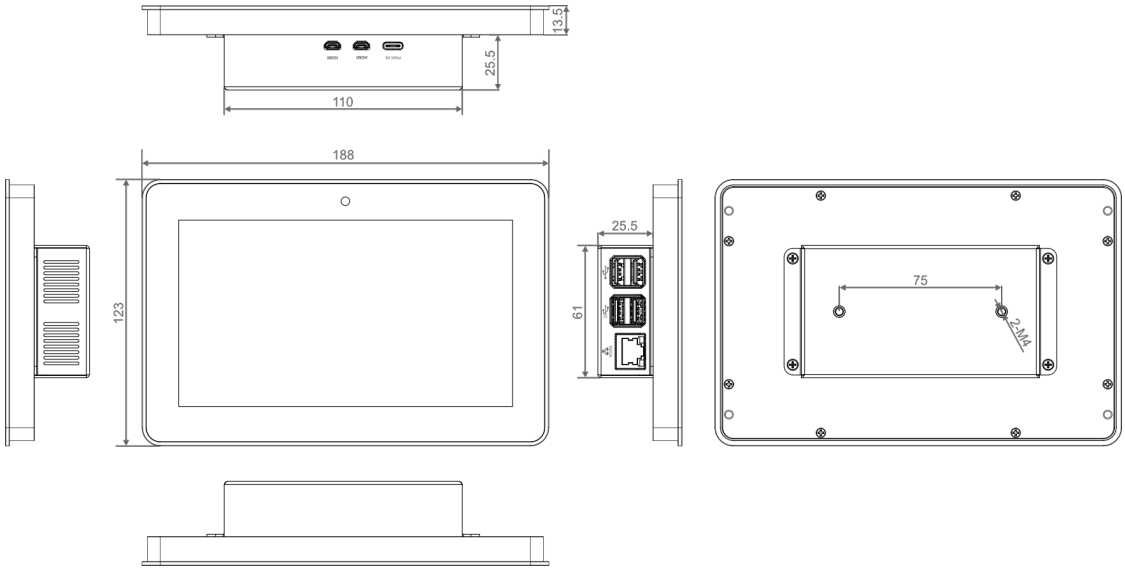


## Ordering Code

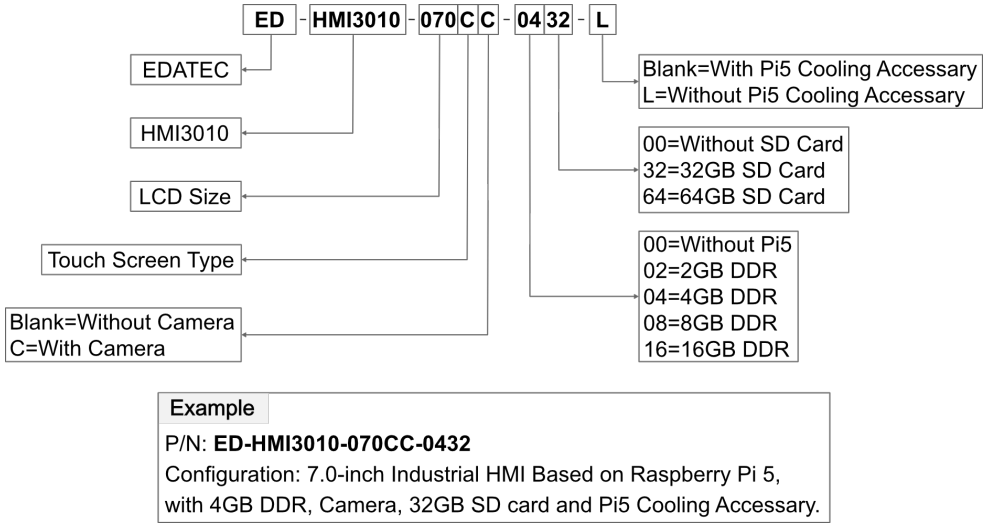


**Example**

P/N: **ED-HMI3010-070CC-0432**

Configuration: 7.0-inch Industrial HMI Based on Raspberry Pi 5, with 4GB DDR, Camera, 32GB SD card and Pi5 Cooling Accessary.

## Special Model Description

| Model | Description |
|---|---|
| ED-HMI3010-070C-0000-L | 7.0-inch LCD Touch Screen for Raspberry Pi 5, with metal case. |
| ED-HMI3010-070CC-0000 | 7.0-inch LCD Touch Screen for Raspberry Pi 5, with metal case, camera and Pi5 Cooling Accessary. |
| ED-HMI3010-070C-0032 | 7.0-inch LCD Touch Screen for Raspberry Pi 5, with metal case, 32GB SD card and Pi5 Cooling Accessary. |
| ED-HMI3010-070CC-0064-L | 7.0-inch LCD Touch Screen for Raspberry Pi 5, with metal case, camera and 64GB SD card. |
| NOTE: If you purchase a product model with Raspberry Pi 5, you need select the Pi5 Cooling Accessary. | |

## Optional Accessory

You can also choose Raspberry Pi Active Cooler for Raspberry Pi 5 according to actual needs.

| Model | Description | Picture |
| --- | --- | --- |
| SC1148 | Raspberry Pi Active Cooler | 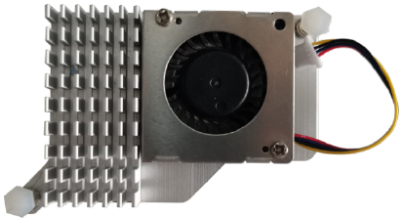 |

You can choose a Raspberry Pi Power Adapter according to actual needs.

| Model | Description | Picture |
| --- | --- | --- |
| SC1149 | Raspberry Pi 27W USB-C Power Supply White UK | |
| SC1150 | Raspberry Pi 27W USB-C Power Supply White AU | |
| SC1151 | Raspberry Pi 27W USB-C Power Supply White IN | |
| SC1152 | Raspberry Pi 27W USB-C Power Supply White EU | |
| SC1153 | Raspberry Pi 27W USB-C Power Supply White US | |
| SC1154 | Raspberry Pi 27W USB-C Power Supply Black UK | |
| SC1155 | Raspberry Pi 27W USB-C Power Supply Black AU | |
| SC1156 | Raspberry Pi 27W USB-C Power Supply Black IN | |
| SC1157 | Raspberry Pi 27W USB-C Power Supply Black EU | |
| SC1158 | Raspberry Pi 27W USB-C Power Supply Black US | |

VESA adapter plate and VESA mounting brackets are available as optional accessories depending on your specific requirements.

| Model | Description | Picture |
| --- | --- | --- |
| ED-VESA-2T4 | VESA Adapter Plate | |

| Model | Description | Picture |
| --- | --- | --- |
| | | |
| ED-VESA-A | VESA wall mount bracket for ED-MONITOR and ED-HMI series | |
| ED-VESA-B | Swivel VESA wall mount bracket for ED-MONITOR and ED-HMI series | |
| ED-VESA-C | VESA desk mount stand for ED-MONITOR and ED-HMI series | |

## Packing List

- 1 x ED-HMI3010-070C Unit
- 1 x Mounting Kit (including 4 x buckles, 4 x M4*10 screws and 4 x M4*16 screws)